REVISIONS						
ZONE	LTR.	DESCRIPTION	ECN NO.	DATE	BY	APPR'D
	A	RELEASED FOR PRODUCTION	72363	25JUN10	SLK	CFM

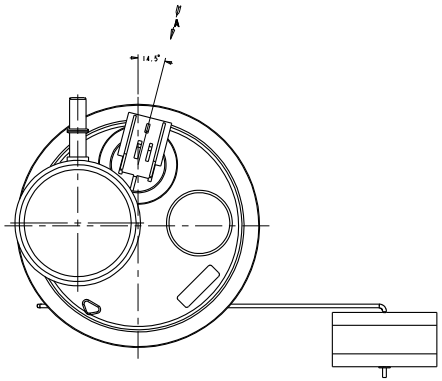

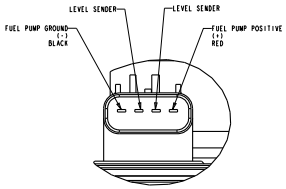

VIEW A
E-CONN
PIN OUT
SCALE 2:1

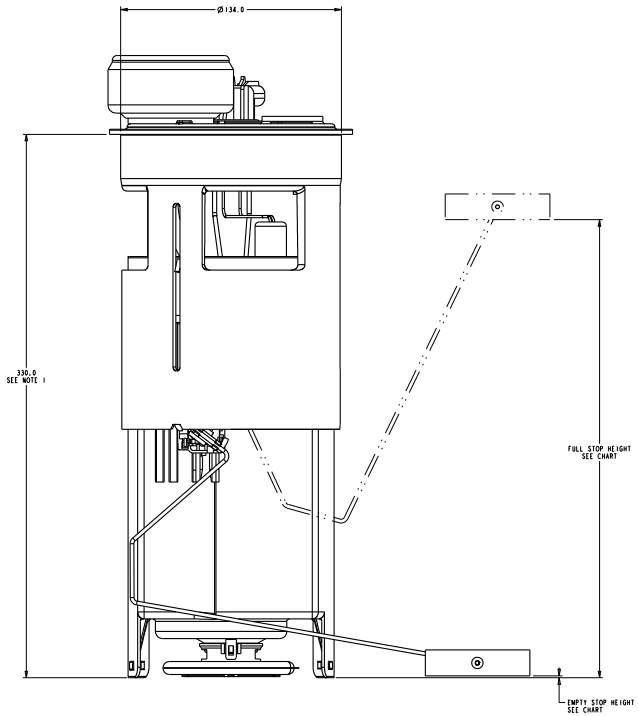

POINT	FLOAT HEIGHT	RESISTANCE (OHMS)
FULL STOP	278.5	26±4
EMPTY STOP	0.0	220±6

NOTES:

1. FUEL MODULE IS SHOWN IN INSTALLED POSITION. TRAVEL FROM THIS POSITION IS ±25mm.
2. THIS UNIT REPLACES CHRYSLER OEM P/N 52102192AB

IN ACCEPTING THIS DRAWING, THE RECIPIENT:
(1) AGREES TO KEEP THE DRAWING AND ALL INFORMATION CONTAINED THEREIN CONFIDENTIAL AND TO USE THE DRAWING AND INFORMATION SOLELY FOR THE PURPOSE OF MANUFACTURING PARTS TO TI AUTOMOTIVE SPECIFICATIONS;
(2) AGREES NOT TO REPRODUCE THE DRAWING OR INFORMATION IN WHOLE OR IN PART WITHOUT TI AUTOMOTIVE'S WRITTEN CONSENT;
(3) AGREES TO RETURN THE DRAWING AND ALL INFORMATION TO TI AUTOMOTIVE UPON REQUEST.

◆ DENOTES ASSEMBLY/TEST/PROCESS
◆ DENOTES SAFETY CHARACTERISTIC
◊ DENOTES SIGNIFICANT CHARACTERISTIC

INTERNAL USE ONLY
DISTRIBUTION CODE
AF

REF: FN0001170

DO NOT SCALE PRINT
DIMENSIONS AND TOLERANCES PER ASME Y14.5M-1994
PROJECTION

PRO-E

TI Automotive
AFTERMARKET DIVISION
1200 COLUMBIA STREET
CARO, MICHIGAN 48723

SIZE: E

TOLERANCE UNLESS OTHERWISE SPECIFIED:
.X ±0.25
.XX ±0.13
.XXX ±0.05
ANGLE ±1.0°
FRACTIONS ±1/64

MATERIAL

FINISH

SCALE: 1:1 DATE: 25JUN10
DRN. BY: S. KADY
CHK'D BY:
APPR'D BY: C. HOCKMAN

TITLE: FUEL DELIVERY MODULE

DRAWING NO. TUI36 REV. A